APPROVAL

BY:_____ DATE:_____

- ☐ APPROVED, PROCEED WITH FABRICATION
- ☐ APPROVED AS NOTED, PROCEED WITH FABRICATION IN ACCORDANCE WITH COMMENTS
- ☐ DISAPPROVED, DO NOT FABRICATE

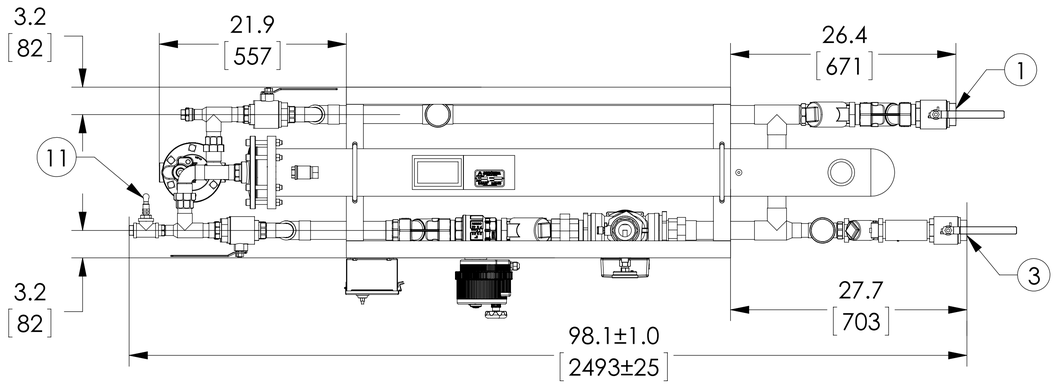

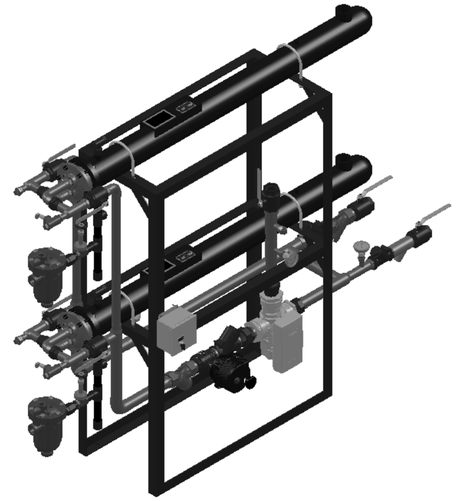

DIGITAL FLO STEAM/WATER SHELL & TUBE HEAT EXCHANGER DOUBLE WALL

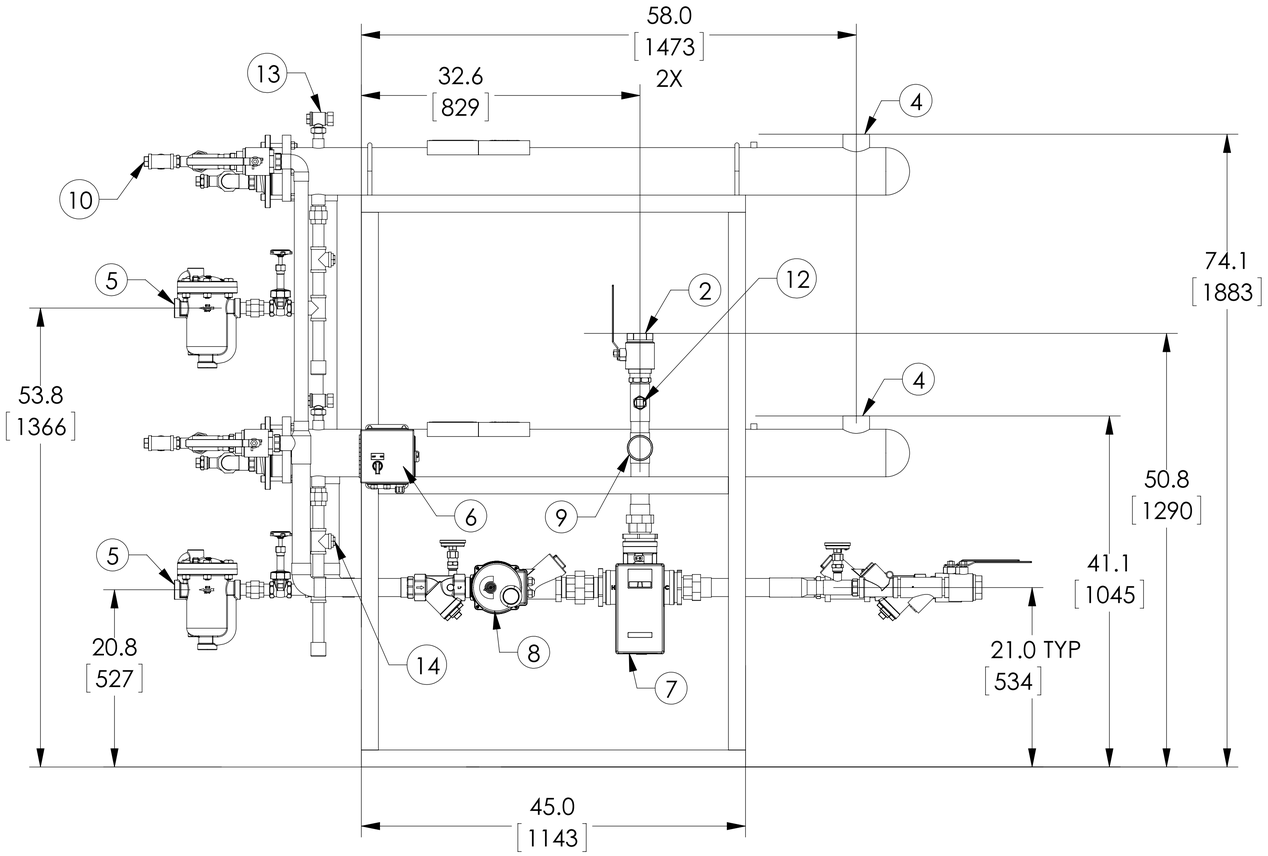

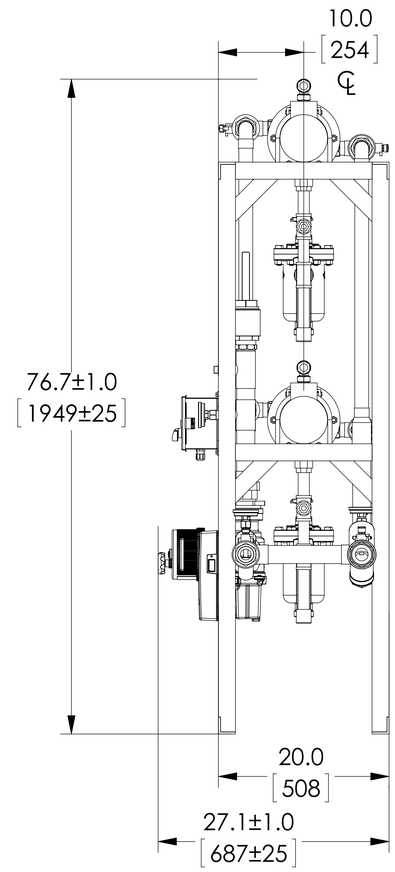

PROJECT NAME :

TAG :

ITEM	DESCRIPTION	CONNECTION
1	COLD WATER INLET	2" NPT
2	MIXED WATER OUTLET	2" NPT
3	RECIRC WATER INLET	1-1/2" NPT
4	STEAM INLET	2-1/2" NPT
5	CONDENSATE OUTLET	1" NPT 813 IB
6	ELECTRICAL PANEL	110VAC @ 0.7A
7	DRV80	3" NPT
8	N.C. ACTUATED BALL VALVE SAFETY SHUT OFF	2" NPT
9	THERMOMETER (3)	
10	CIP CONNECTION (4)	1" NPT
11	SRV(PRESSURE) PIPE TO DRAIN (2)	1" NPT
12	SRV(CONNECTION FOR USER SUPPLIED T&P)	1" NPT
13	AIR VENT (2)	3/4" NPT
14	VACUUM BREAKER (2)	1/2" NPT

ITEM	MATERIAL
PIPING	COPPER TYPE "L"
EXCHANGER SHELL MATL.	CARBON STEEL
EXCHANGER TUBE MATL.	ADMIRALTY BRASS
DRV SET POINT	85°F

NOTE(S):

1. ALL DIMENSIONS +/- 0.5[13] UNLESS OTHERWISE SHOWN.
2. COMPLETE ASSEMBLY LEAD FREE COMPLIANT - THE WETTED SURFACE OF THIS PRODUCT CONTACTED BY CONSUMABLE WATER CONTAINS LESS THAN ONE QUARTER OF ONE PERCENT (0.25%) OF LEAD BY WEIGHT.
3. PACKAGE INCLUDES ALL REQUIRED INLET CHECK VALVES AND STRAINERS ON DOMESTIC SIDE.
4. DRV, SAFETY SHUT OFF AND ELECTRICAL PANEL ARE PREWIRED TO PROVIDE A SINGLE ELECTRICAL LANDING POINT AT THE PANEL.
5. ITEM #11 IS 1/4[6.4] PIPE TO DRAIN IF FACTORY PRESS RELIEF VALVE IS USED.

DO NOT SCALE DRAWING
TOLERANCES UNLESS OTHERWISE SPECIFIED
DIMENSIONING ENGLISH [mm]

FRACTIONAL ± 1/64
ANGULAR: ± 2

		IN.	MM
DECIMAL	.XXXX ±	.0005	-----
	.XXX ±	.005	.010
	.XX ±	.015	.10
	.X	---------	.3

Armstrong®

	NAME	DATE
DRAWN	CFG	11/18/2013
RELEASED	SALES	

ARMSTRONG INTERNATIONAL

Copyright © 2010 ARMSTRONG INTERNATIONAL, INC.

DF535DWP50 2 NPT 2 NPT 1-1/2 NPT CPR

CONFIG# (C-118806)

MATERIAL

SHEET 1 OF 1

REV

DWG. D589725